endutec

Handler Dedicated Manipulator
MP-11

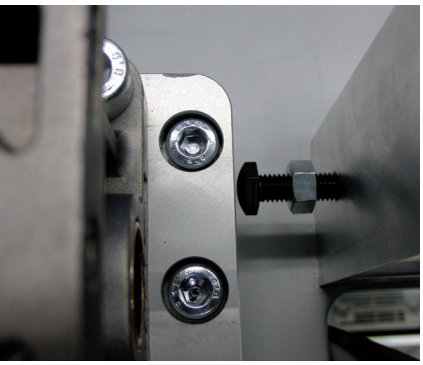

Maximum test head
weight 500 kg

motion controlled manipulator

190° tumble

free programmable for
movement speed
and end positions

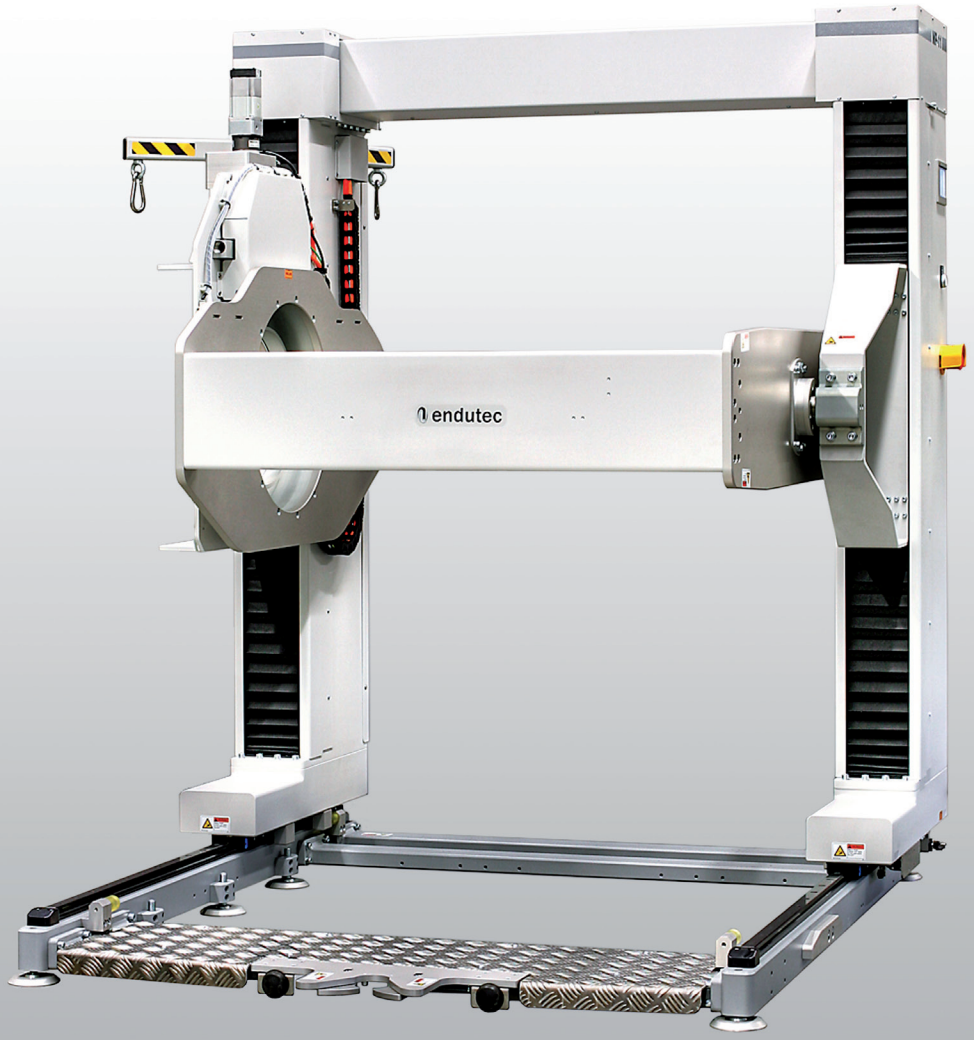

endutec

Handler Dedicated Manipulator
MP-11

Technical Data

Linear Motion	
Traverse path z-axis (up/down)*	500 mm
Traverse path x-axis (in/out)	905 mm
Traverse path y-axis (side/side)	124 mm
Rotary Motion	
Tumble (about y-axis)*	190°
Twist (about x-axis)	± 2°
Theta (about y-axis)	± 6°
Weight	
Net weight	900 kg
Weight capacity	500 kg

Movement Compliance	
Tumble	± 0.6°
Twist	± 1°
Theta	± 2°
Dimensions	
Footprint	1760 x 1465 mm

*) movement with motion control

CE S2IS8 conform

Optimized for back-end applications (pick and place / gravity)

High end motion control with touch panel

Individual customer solutions

easy access and very short training period

Highest quality equipment made in Germany

Side View

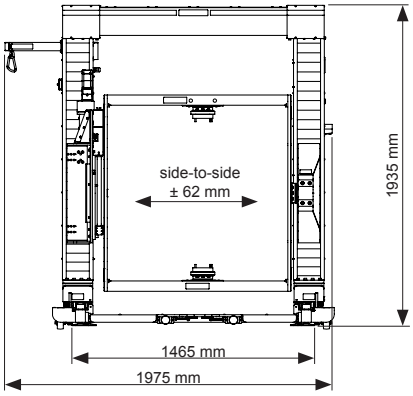

Front View

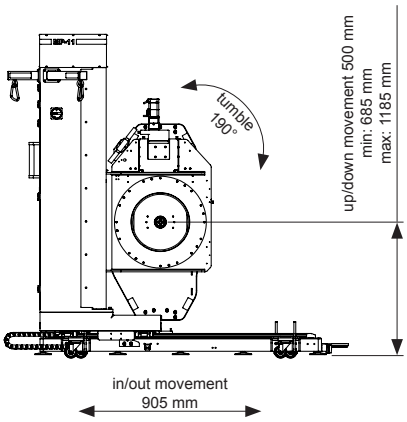

Top View

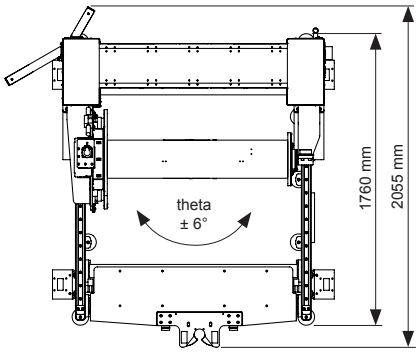

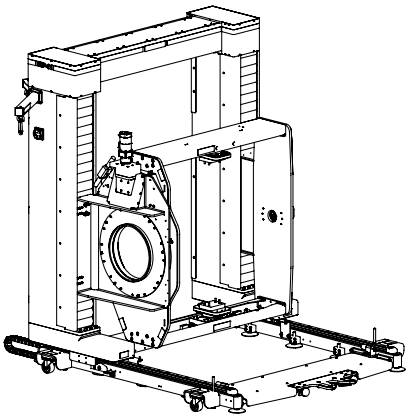

Floor load diagrams and layout proposals on request.

Subject to technical changes without prior notice.

Endutec
Maschinenbau Systemtechnik GmbH
Eichfeldstr. 13a
83339 Chieming
Germany

Phone +49 (0) 8664 / 928 488 - 0
Fax +49 (0) 8664 / 928 488 - 29
Email sales@endutec.de
Web www.endutec.de

© Endutec, MP-11 data sheet V1.0, June 2011